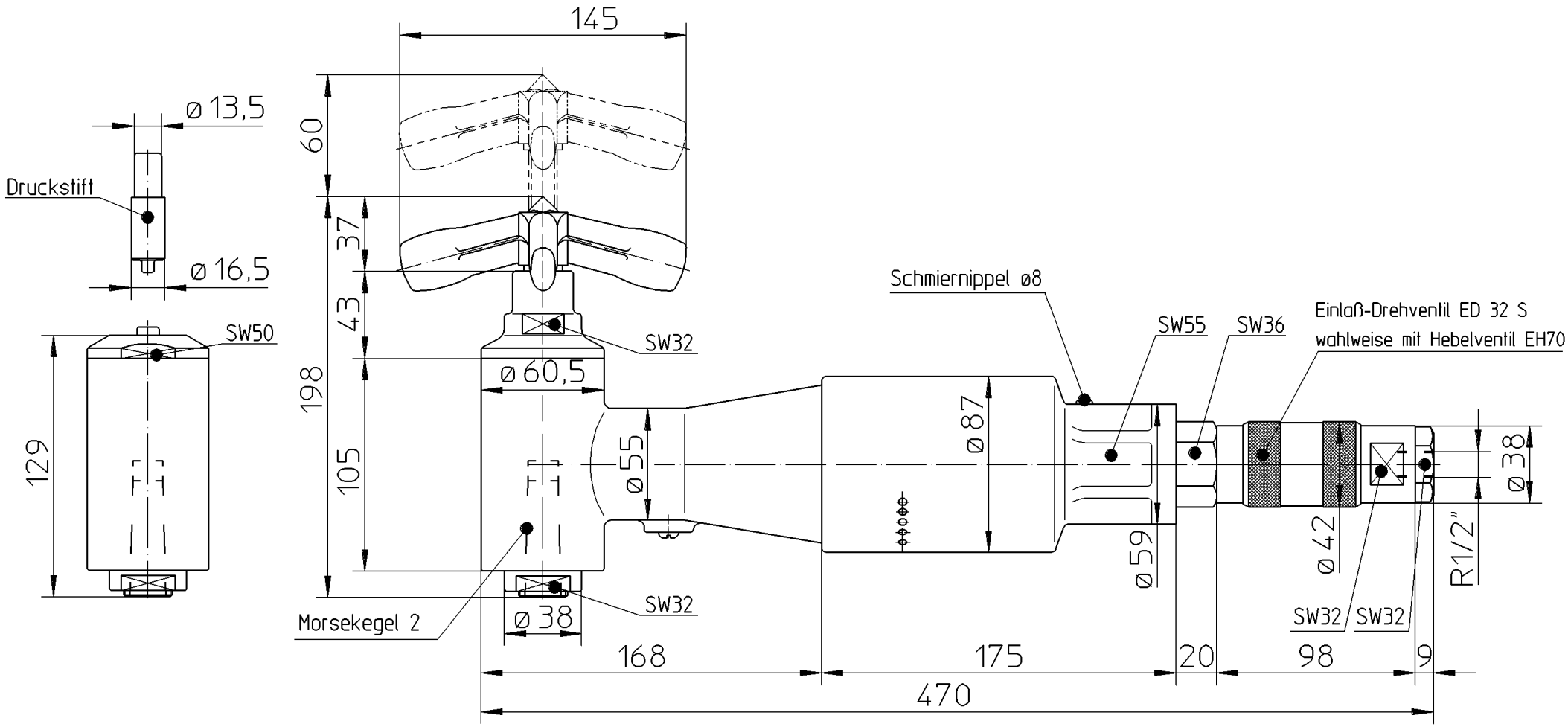

Winkelbohrmaschine
Drilling machine
D 3350
43350006